CASE SPECIFICATIONS:

REFRIGERATION:
LOAD: 3,200 BTU/hr
COIL TEMP: 30°F
SUCTION STUB: 5/8IN ODS
LIQUID STUB: 3/8IN ODS

ELECTRICAL 115V, 60HZ, 1PH
EVAP. FANS: 0.60A
CASE LIGHTS: 3.6A
SHELF LIGHTS: 2.4A
COND. PUMP: 1.0A
EVAP. PAN: 3.0A
1/2 HP COND. UNIT: 9.2A
TOTAL: 19.8A
MCA: 23.5A

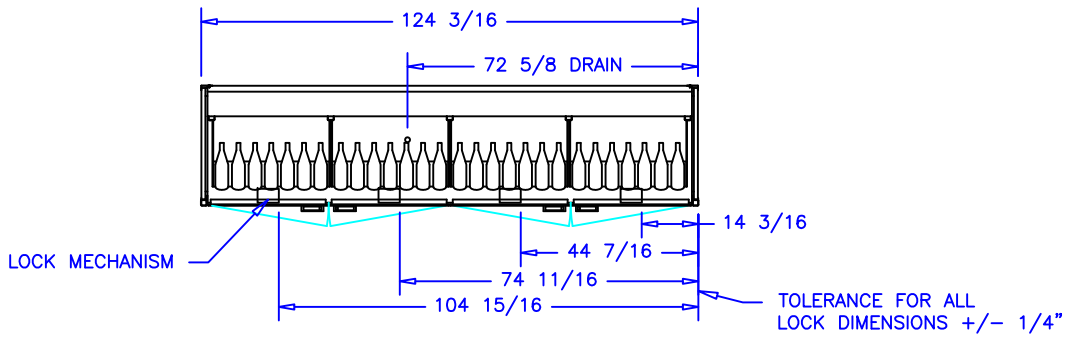

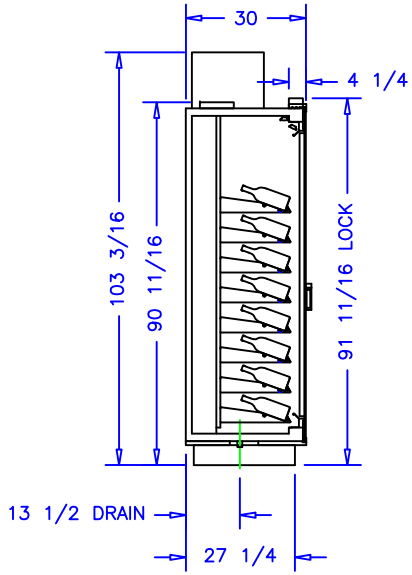

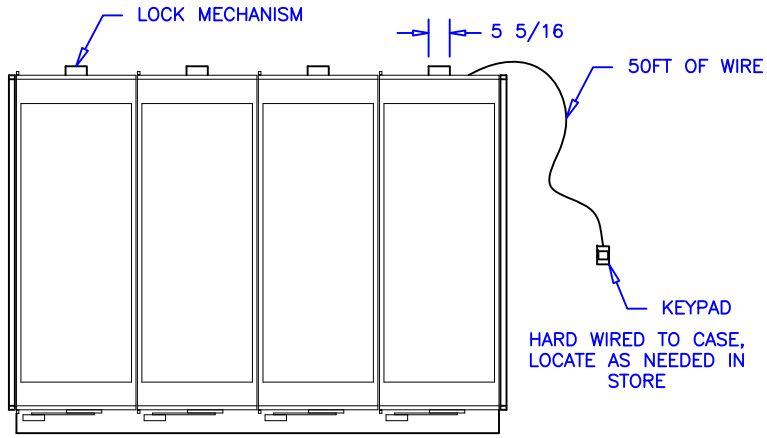

BOTTLES PER DOOR: 56
TOTAL FOR CASE: 224

c UL us
LISTED
37X1
COMMERCIAL REFRIGERATOR
LESS CONDENSING UNIT

NOTES:

1. OPTIONS NOT SHOWN ON DRAWING SHOULD BE LISTED IN WRITTEN PROPOSAL AND LISTED ON PURCHASE ORDER.
2. ELEC. CONNECTION: 115V/230V, 4x4 SUPPLY BOX AS NEEDED.
3. EXPANSION VALVES: SPORLAN "Q" SERIES STANDARD UNLESS OTHERWISE SPECIFIED.
4. DEFROST CONTROL: REMOTE CASES (N/A, DIGITAL CASE CONTROLERS AVAILABLE), OPTIONAL CONDENSING UNIT (DIGITAL CASE CONTROLER).
5. THERMOSTATS & LIQUID LINE SOLENOID VALVES: OPTIONAL.
6. DRAIN: 1 1/2 INCH PVC.
7. SPECIFICATIONS SUBJECT TO CHANGE WITHOUT NOTICE.

AUTHORIZATION (PRINT):	DATE:			börgen systems		
				SCALE: 1:48		DRAWN BY: D HUNT
				DATE: 4-3-13		CHECKED BY:
				4DR WINE TALL		
		DATE	REV.	DIM: INCH		DRAWING NUMBER
		REVISION		TOL:		P6395