CASE SPECIFICATIONS:

REFRIGERATION:
LOAD: 7,400 BTU/hr
COIL TEMP: 30°F
SUCTION STUB: 5/8IN ODS
LIQUID STUB: 3/8IN ODS

ELECTRICAL 115V, 60HZ, 1PH
EVAP. FANS: 0.60A
LIGHTS: 7.2A
CONDENSATE PUMP: 1.0A
CONDENSATE PAN: 3.0A
TOTAL: 11.8A
MCA: 15.0A

OPTIONAL ELECTRICAL 208V, 60HZ, 1PH
1 HP COND. UNIT: 7.7A
TOTAL: 7.7A
MCA: 10.8A

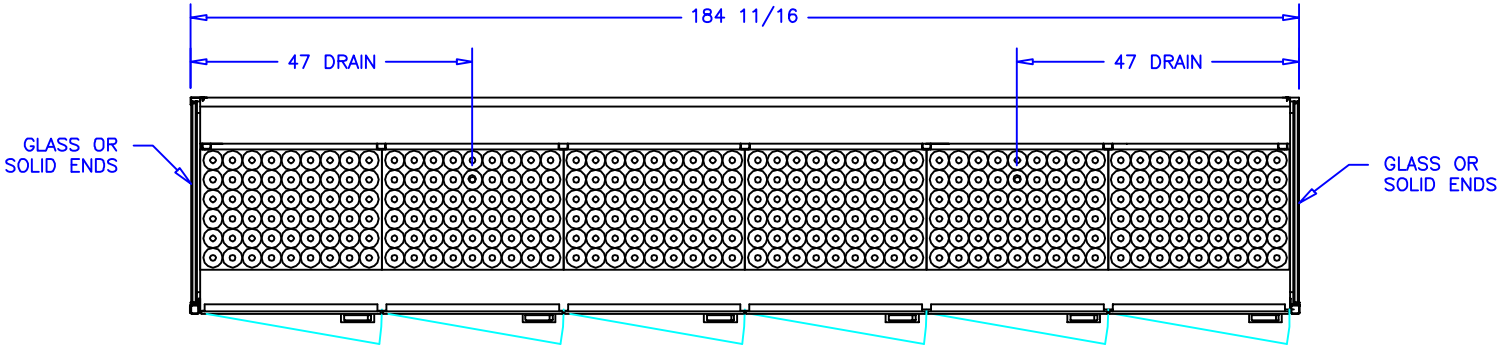

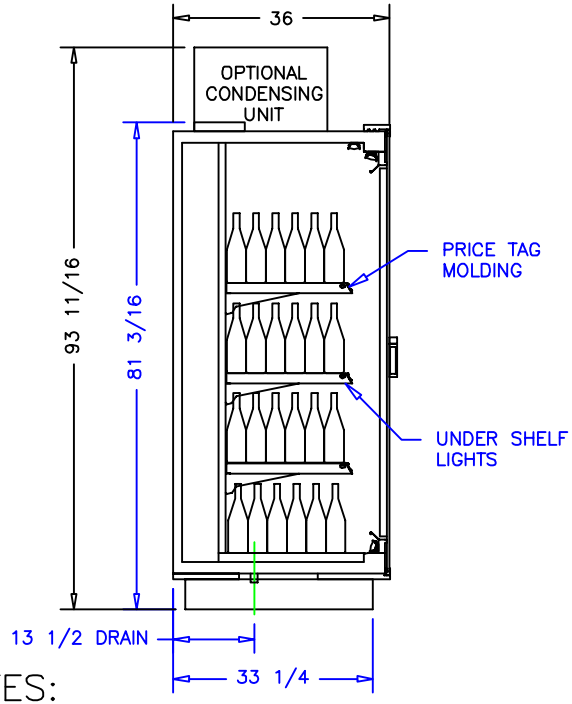

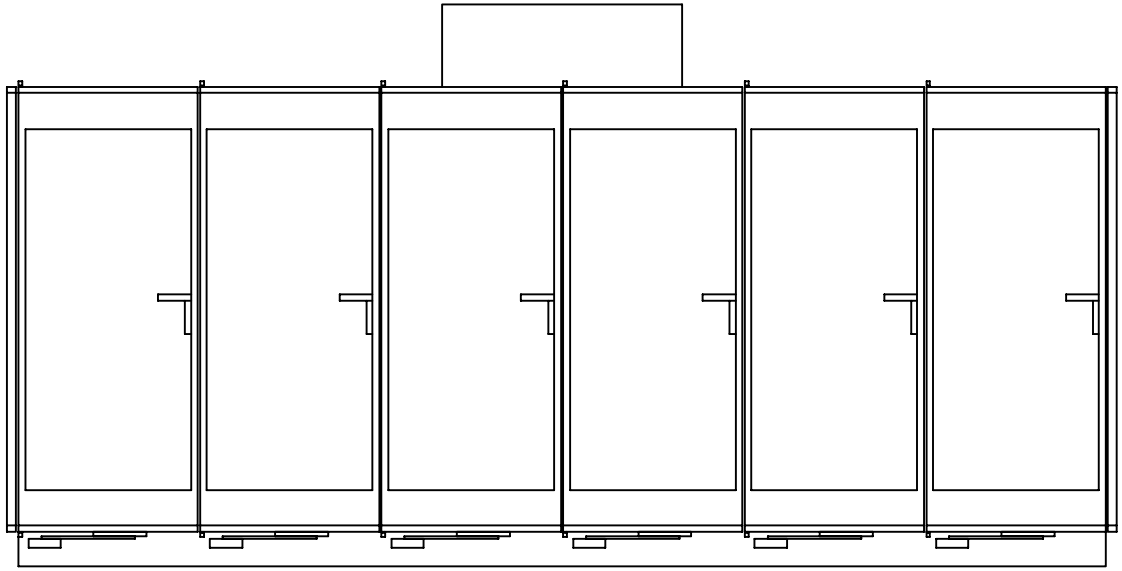

NOTES:

1. OPTIONS NOT SHOWN ON DRAWING SHOULD BE LISTED IN WRITTEN PROPOSAL AND LISTED ON PURCHASE ORDER.
2. ELEC. CONNECTION: 115V/230V, 4x4 SUPPLY BOX AS NEEDED.
3. EXPANSION VALVES: SPORLAN "Q" SERIES STANDARD UNLESS OTHERWISE SPECIFIED.
4. DEFROST CONTROL: REMOTE CASES (N/A, DIGITAL CASE CONTROLERS AVAILABLE), OPTIONAL CONDENSING UNIT (DIGITAL CASE CONTROLER).
5. THERMOSTATS & LIQUID LINE SOLENOID VALVES: OPTIONAL.
6. DRAIN: 1 1/2 INCH PVC.
7. SPECIFICATIONS SUBJECT TO CHANGE WITHOUT NOTICE.

C UL US
LISTED
37X1
COMMERCIAL REFRIGERATOR
LESS CONDENSING UNIT

AUTHORIZATION (PRINT):	DATE:			börgen systems
				SCALE: 1:32 — DRAWN BY: D HUNT
				DATE: 4–21–11 — CHECKED BY:
		2–11–15	DRH	6DR WINE
		4–26–11	SEH	
		DATE	REV.	DIM: INCH — DRAWING NUMBER
		REVISION		TOL: — P6025