DOORED CASE SPECIFICATIONS:

REFRIGERATION
LOAD: 6,900 BTU/hr
SUCTION TEMP: 20° F
LIQUID LINE: 3/8IN ODS
SUCTION LINE: 5/8IN ODS

ELECTRICAL 115VAC, 60HZ, 1PH.
EVAP. FANS: .60A
LIGHTS: 2.4A
CONDENSATE PUMP: 1.0A
EVAP. PAN: 3.0A
TOTAL: 7.0A
MCA: 15.0A

ELECTRICAL 230VAC, 60HZ, 1PH.
1 1/2HP COND. UNIT: 10.9A
TOTAL: 7.7A
MCA: 10.8A

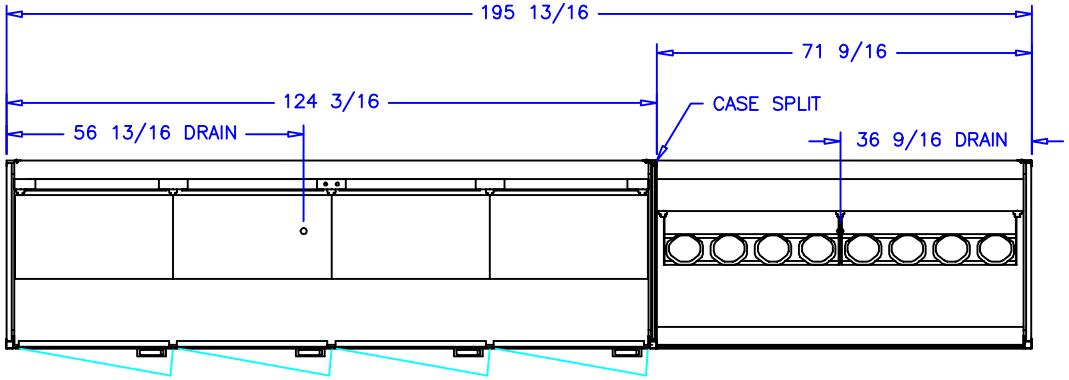

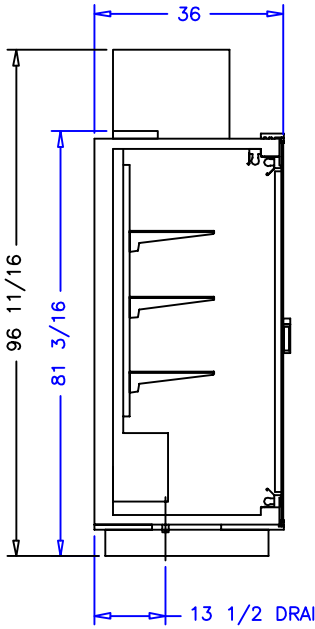

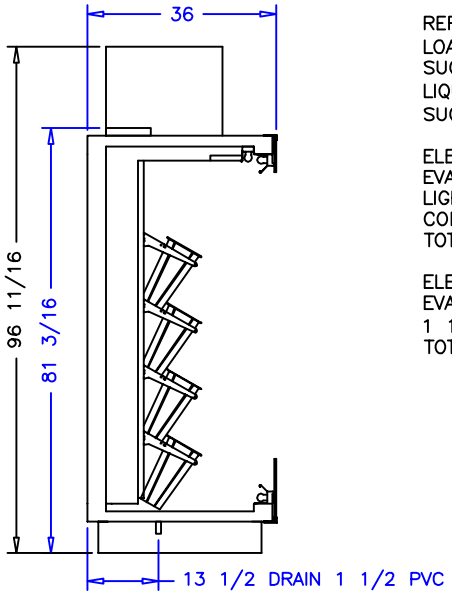

OEN CASE SPECIFICATIONS:

REFRIGERATION
LOAD: 8,750 BTU/hr
SUCTION TEMP: 20°
LIQUID LINE: 3/8IN ODS
SUCTION LINE: 5/8IN ODS

ELECTRICAL 115VAC, 60HZ, 1PH.
EVAP. FANS: .90A
LIGHTS: 2.4A
CONDENSATE PUMP: 1.0A
TOTAL: 4.3A

ELECTRICAL 230VAC, 60HZ, 1PH.
EVAP. PAN: 6.5A
1 1/2HP COND. UNIT: 15.9A
TOTAL: 22.4A

NOTES:

1. OPTIONS NOT SHOWN ON DRAWING SHOULD BE LISTED IN WRITTEN PROPOSAL AND LISTED ON PURCHASE ORDER.
2. ELEC. CONNECTION: 115V/230V, 4x4 SUPPLY BOX AS NEEDED.
3. EXPANSION VALVES: SPORLAN "Q" SERIES STANDARD UNLESS OTHERWISE SPECIFIED.
4. DEFROST CONTROL: REMOTE CASES (N/A, DIGITAL CASE CONTROLERS AVAILABLE), OPTIONAL CONDENSING UNIT (DIGITAL CASE CONTROLER).
5. THERMOSTATS & LIQUID LINE SOLENOID VALVES: OPTIONAL.
6. DRAIN: 1 INCH NATIONAL PIPE STRAIGHT THREAD.
7. SPECIFICATIONS SUBJECT TO CHANGE WITHOUT NOTICE.

		börgen systems		
		SCALE: 1:24		DRAWN BY: D HUNT
		DATE: 11-11-99		CHECKED BY:
8-23-04	DRH	4DR & 6FT DF COMBO RIGHT		
DATE	REV.	DIM: INCH		DRAWING NUMBER
REVISION		TOL:		P3201