CASE SPECIFICATIONS:

ELECTRICAL 208/230VAC, 60HZ, 1PH.
(6) 11QT SOUP WELLS: 22.7A
TOTAL: 22.7A
MCA: 35.0A

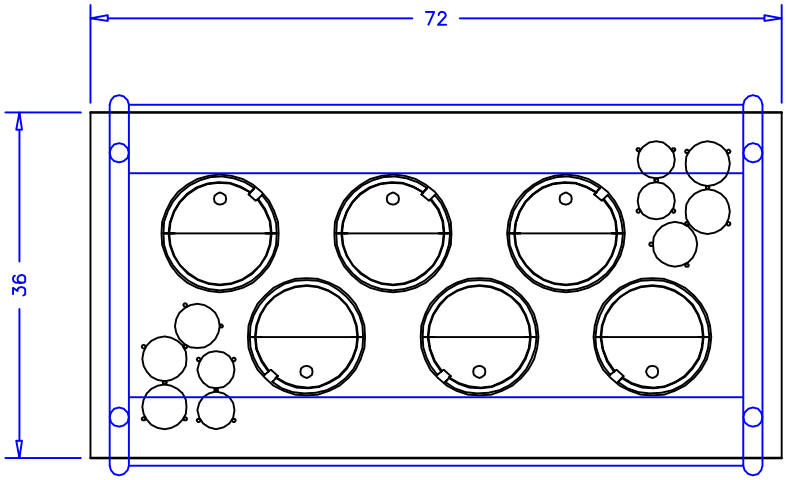

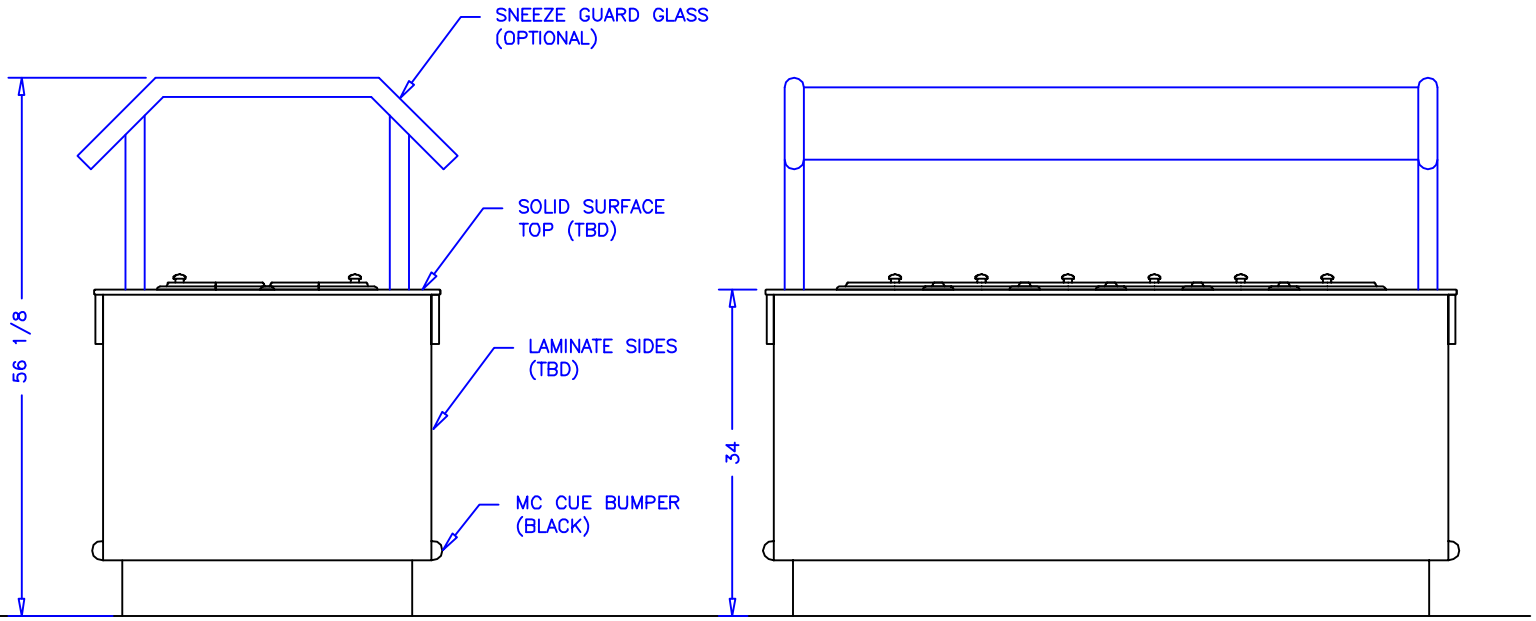

NSF
COMPONENT

c UL us
LISTED
37X1
COMMERCIAL REFRIGERATOR
LESS CONDENSING UNIT

NOTES:

1. OPTIONS NOT SHOWN ON DRAWING SHOULD BE LISTED IN WRITTEN PROPOSAL AND LISTED ON PURCHASE ORDER.
2. ELEC. CONNECTION: 115V/230V, 4x4 SUPPLY BOX AS NEEDED.
3. EXPANSION VALVES: SPORLAN "Q" SERIES STANDARD UNLESS OTHERWISE SPECIFIED.
4. DEFROST CONTROL: REMOTE CASES (N/A, DIGITAL CASE CONTROLERS AVAILABLE), OPTIONAL CONDENSING UNIT (DIGITAL CASE CONTROLER).
5. THERMOSTATS & LIQUID LINE SOLENOID VALVES: OPTIONAL.
6. DRAIN: 1 1/2 INCH PVC.
7. SPECIFICATIONS SUBJECT TO CHANGE WITHOUT NOTICE.

AUTHORIZATION (PRINT):	DATE:			börgen systems		
				SCALE: 1:24		DRAWN BY: D HUNT
SIGNATURE:				DATE: 10–15–14		CHECKED BY:
		3–9–15	DRH	6FT SOUP ISLAND		
		DATE	REV.	DIM: INCH		DRAWING NUMBER
		REVISION		TOL:		P6728