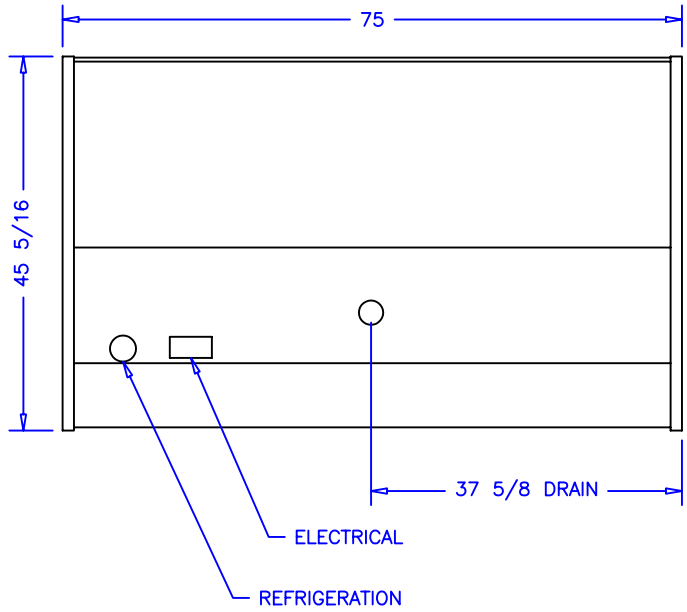

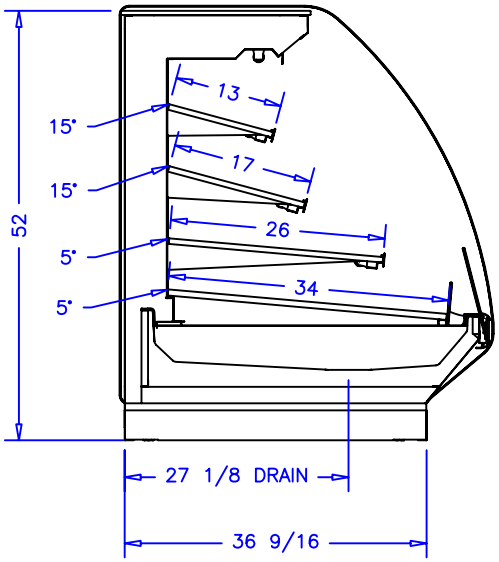

CASE SPECIFICATIONS:

REFRIGERATION
LOAD: 5,750 BTU/hr
SUCTION TEMP: 20° F
LIQUID LINE: 3/8IN ODS
SUCTION LINE: 5/8IN ODS

ELECTRICAL 115VAC, 60HZ, 1PH.
EVAP. FANS: 1.56A
LIGHT BALLAST: 1.0A
TOTAL: 2.56A
MCA: 15.0A

NOTES:

1. OPTIONS NOT SHOWN ON DRAWING SHOULD BE LISTED IN WRITTEN PROPOSAL AND LISTED ON PURCHASE ORDER.
2. ELEC. CONNECTION: 115V/230V, 4x4 SUPPLY BOX AS NEEDED.
3. EXPANSION VALVES: SPORLAN "Q" SERIES STANDARD UNLESS OTHERWISE SPECIFIED.
4. DEFROST CONTROL: REMOTE CASES (N/A, DIGITAL CASE CONTROLERS AVAILABLE), OPTIONAL CONDENSING UNIT (DIGITAL CASE CONTROLER).
5. THERMOSTATS & LIQUID LINE SOLENOID VALVES: OPTIONAL.
6. DRAIN: 1 1/2 INCH PVC.
7. SPECIFICATIONS SUBJECT TO CHANGE WITHOUT NOTICE.

AUTHORIZATION (PRINT):	DATE:			börgen systems	
SIGNATURE:				SCALE: 1:24	DRAWN BY: D HUNT
				DATE: 12-20-05	CHECKED BY:
		2-7-06	DRH	6' SELF SERV. MERCH.	BG6SSM
		DATE	REV.	DIM: INCH	DRAWING NUMBER
		REVISION		TOL:	P4765A